Work Order ID 71107 – SPLIT

Wednesday, June 22, 2011 3:39:28 PM

Item ID: D2572
Revision ID:
Item Name: Saddle, Fwd In 205
Start Date: 6/23/2011 **Start Qty:** 12.00
Required Date: 7/7/2011 **Req'd Qty:** 12.00
Reference:

6

Accept **Setup** **Start** **Stop**

Cust Item ID:
Customer:

Approvals: **Process Plan:** MMF **Date:** 11-06-22 **Tooling:** **Date:**
QC: **Date:** **SPC (Y/N):** **Date:**

Run **Start** **Stop**

Sequence ID/ Work Center ID	Operation Description	Set Up/ Run Hours	Tool ID	Tool #	Plan Code	Accept Qty	Reject Qty	Reject Number	Insp. Stamp
Draw Nbr	**Revision Nbr**								
D2572	Rev E								
100	HAAS CNC VERTICAL MACHINING #1	0.00				6	ϕ		
HAAS 1	**Memo**	0.00							
HAAS CNC vertical machine #1	Program Batch No. 71107 Double check by: RR / B.A 1-Machine Step No 1 per Folio FA051 and inspect per attached Dimension Sheets 2-Machine Step No 2 per Folio FA051 and inspect per attached Dimension Sheets 3-Machine Step No 3 per Folio FA051 and insp								
110	CONVENTIONAL MILLING MACHINE	0.00				6	ϕ		
Mill Conv	**Memo**	0.00							
Conventional Milling Machine	Machine keyway as per dwg D2571 & D2572								

mf/ RR 11.7.19

mf/ RR 11.7.19

Dart Aerospace Ltd

W/O:		WORK ORDER CHANGES					
DATE	STEP	PROCEDURE CHANGE	By	Date	Qty	Approval Chief Eng / Prod Mgr	Approval QC Inspector

Part No: _____ **PAR #:** _____ **Fault Category:** _____ **NCR:** Yes No **DQA:** _____ **Date:** _____

Resolution: _____ **Disposition:** _____ **QA: N/C Closed:** _____ **Date:** _____

NCR:		WORK ORDER NON-CONFORMANCE (NCR)						
DATE	STEP	Description of NC Section A	Corrective Action Section B			Verification Section C	Approval Chief Eng	Approval QC Inspector
			Initial Chief Eng	Action Description Chief Eng	Sign & Date			

NOTE: Date & initial all entries

H:\fFORMS\Quality Assurance\approved QA\NCRWO RevE

Work Order ID 71107

Wednesday, June 22, 2011 3:39:29 PM

Item ID: D2572
Revision ID:
Item Name: Saddle, Fwd In 205
Start Date: 6/23/2011 **Start Qty:** 12.00
Required Date: 7/7/2011 **Req'd Qty:** 12.00
Reference:

Accept

Setup Start
Stop

Cust Item ID:
Customer:

Approvals: **Process Plan:** _____ **Date:** _____ **Tooling:** _____ **Date:** _____
QC: _____ **Date:** _____ **SPC (Y/N):** _____ **Date:** _____

Run Start
Stop

Sequence ID/ Work Center ID	Operation Description	Set Up/ Run Hours	Tool ID	Tool #	Plan Code	Accept Qty	Reject Qty	Reject Number	Insp. Stamp
120 QC Quality Control	QC2- Inspect parts off machine FAI/FAIB	0.00				6	ϕ		
	Memo	0.00							
130 QC Quality Control	QC8- Inspect parts - second check	0.00				6	ϕ		
	Memo	0.00							
140 HandFinish Hand Finishing	Chemical Conversion Coat per QSI005 4.1	0.00				6	ϕ	11-7-20.	
	Memo	0.00							

Dart Aerospace Ltd

W/O:		WORK ORDER CHANGES					
DATE	STEP	PROCEDURE CHANGE	By	Date	Qty	Approval Chief Eng / Prod Mgr	Approval QC Inspector

Part No: _____ **PAR #:** _____ **Fault Category:** _____ **NCR:** Yes No **DQA:** _____ **Date:** _____

Resolution: _____ **Disposition:** _____ **QA: N/C Closed:** _____ **Date:** _____

NCR:		WORK ORDER NON-CONFORMANCE (NCR)						
DATE	STEP	Description of NC Section A	Corrective Action Section B			Verification Section C	Approval Chief Eng	Approval QC Inspector
			Initial Chief Eng	Action Description Chief Eng	Sign & Date			

NOTE: Date & initial all entries

Work Order ID 71107

Wednesday, June 22, 2011 3:39:29 PM

Item ID: D2572
Revision ID:
Item Name: Saddle, Fwd In 205
Start Date: 6/23/2011 **Start Qty:** 12.00
Required Date: 7/7/2011 **Req'd Qty:** 12.00
Reference:

Accept

Setup Start
Stop

Cust Item ID:
Customer:

Approvals: **Process Plan:** _____ **Date:** _____ **Tooling:** _____ **Date:** _____
QC: _____ **Date:** _____ **SPC (Y/N):** _____ **Date:** _____

Run Start
Stop

Sequence ID/ Work Center ID	Operation Description	Set Up/ Run Hours	Tool ID	Tool #	Plan Code	Accept Qty	Reject Qty	Reject Number	Insp. Stamp
150 Powdercoat Powder Coating	White Gloss(Ref:4.3.5.1) per QSI005 4.3-Alum m 117745. **Memo** START TIME: 1:45. OVEN TEMPERATURE: 320° FINISH TIME: 2:15.	0.00 0.00				6		11-7-20.	
160 QC Quality Control	QC3- Inspect Part Finish **Memo**	0.00 0.00				11/7/20	6		
170 Packaging Packaging	Identify as per dwg & Stock Location: 429 **Memo**	0.00 0.00				11/7/20	6		

Dart Aerospace Ltd

W/O:		WORK ORDER CHANGES					
DATE	STEP	PROCEDURE CHANGE	By	Date	Qty	Approval Chief Eng / Prod Mgr	Approval QC Inspector

Part No: _____ PAR #: _____ Fault Category: _____ NCR: Yes No DQA: _____ Date: _____

Resolution: _____ Disposition: _____ QA: N/C Closed: _____ Date: _____

NCR:		WORK ORDER NON-CONFORMANCE (NCR)						
DATE	STEP	Description of NC Section A	Corrective Action Section B			Verification Section C	Approval Chief Eng	Approval QC Inspector
			Initial Chief Eng	Action Description Chief Eng	Sign & Date			

NOTE: Date & initial all entries

H:\fFORMS\Quality Assurance\approved QA\NCRWO RevE

Work Order ID 71107

Wednesday, June 22, 2011 3:39:29 PM

Item ID: D2572 **Accept** **Setup** **Start**

Revision ID:

Item Name: Saddle, Fwd In 205 **Stop**

Start Date: 6/23/2011 **Start Qty:** 12.00 **Cust Item ID:**

Required Date: 7/7/2011 **Req'd Qty:** 12.00 **Customer:**

Reference:

Approvals: **Process Plan:** _____ **Date:** _____ **Tooling:** _____ **Date:** _____ **Run** **Start**

QC: _____ **Date:** _____ **SPC (Y/N):** _____ **Date:** _____ **Stop**

Sequence ID/ Work Center ID	Operation Description	Set Up/ Run Hours	Tool ID	Tool #	Plan Code	Accept Qty	Reject Qty	Reject Number	Insp. Stamp
180	QC21- Final Inspection - Work Order Release	0.00							11/7/21
QC	**Memo**	0.00							
Quality Control									

MF 11-07-21

Dart Aerospace Ltd

W/O:		WORK ORDER CHANGES					
DATE	STEP	PROCEDURE CHANGE	By	Date	Qty	Approval Chief Eng / Prod Mgr	Approval QC Inspector

Part No: _____ **PAR #:** _____ **Fault Category:** _____ **NCR:** Yes No **DQA:** _____ **Date:** _____

Resolution: _____ **Disposition:** _____ **QA: N/C Closed:** _____ **Date:** _____

NCR:		WORK ORDER NON-CONFORMANCE (NCR)						
DATE	STEP	Description of NC Section A	Corrective Action Section B			Verification Section C	Approval Chief Eng	Approval QC Inspector
			Initial Chief Eng	Action Description Chief Eng	Sign & Date			

NOTE: Date & initial all entries

H:\fFORMS\Quality Assurance\approved QA\NCRWO RevE

Picklist Print

Wednesday, June 22, 2011 3:39:23 PM

Work Order ID: 71107

Parent Item: D2572

Parent Item Name: Saddle, Fwd In 205

Start Date: 6/23/2011 **Required Date:** 7/7/2011

Start Qty: 12.00 **Required Qty:** 12.00

Comments: IPP: I□02.10.02□Re-format; Change to Dwg Rev. D & incorporated D2572□KJ□

Component Item ID/ Item Name	Replacement Item ID	Mfg/ Purch	Bin Item	Primary Location	Last Location	Route Seq ID	Unit of Measure	Qty on Hand	Qty per Kit	Total Qty	Qty Issued	Date Issued	Status
D6101-005 Saddle Billet		Manufactured	No			100	Each	49.0000	1	12			

Location	Loc Qty	Loc Code	
MAT045	38		
66966	18		
→ 70676	20		10
MAT046	11		
65382	4		
65953	4		
66966	3		

mk 11/07/14

Dart Aerospace Ltd

W/O:		WORK ORDER CHANGES					
DATE	STEP	PROCEDURE CHANGE	By	Date	Qty	Approval Chief Eng / Prod Mgr	Approval QC Inspector

Part No: _____ **PAR #:** _____ **Fault Category:** _____ **NCR:** Yes No **DQA:** _____ **Date:** _____

Resolution: _____ **Disposition:** _____ **QA: N/C Closed:** _____ **Date:** _____

NCR:		WORK ORDER NON-CONFORMANCE (NCR)						
DATE	STEP	Description of NC Section A	Corrective Action Section B			Verification Section C	Approval Chief Eng	Approval QC Inspector
			Initial Chief Eng	Action Description Chief Eng	Sign & Date			

NOTE: Date & initial all entries

H:\fFORMS\Quality Assurance\approved QA\NCRWO RevE

DART AEROSPACE LTD	Work Order:	71107
Description: Saddle, Fwd Inboard	**Part Number:**	**D2572**
Inspection Dwg: D2572 Rev. E		**Page 1 of 1**

Inspect dimensions highlighted on inspection sheet drawing D2572 Rev. E and record below:

				Recorded Actual Dimensions					
Dim	**Min**	**Max**	**Go/No Go Gauge**	**1**	**2**	**3**	**4**	**By**	**Date**
A	0.438	0.443		.440	.440	.440	.440		
B	1.745	1.755		1.750	1.750	1.750	1.750		
C	3.495	3.505		3.500	3.500	3.500	3.500		
D	1.745	1.755		1.750	1.750	1.750	1.750		
E	7.990	8.010		8.004	8.002	8.004	8.004		
F	0.490	0.510		.502	.494	.495	.495		
G	0.257	0.262		.259	.257	.257	.257		
H	0.375	0.380		.378	.377	.377	.377		
I	0.490	0.510		.498	.500	.500	.500		
J	1.174	1.184		1.178	1.178	1.178	1.178		
K	0.558	0.578		.566	.565	.565	.565		
L	1.174	1.184		1.178	1.178	1.178	1.178		
M	1.490	1.500		1.495	1.495	1.495	1.495		
N	2.495	2.505		2.500	2.500	2.500	2.500		
O	3.869	3.879		3.873	3.874	3.874	3.874		
P	0.115	0.135		.125	.124	.125	.125		
Q	0.115	0.135		.135	.135	.135	.135		
R	0.240	0.260		.257	.253	.252	.252		
S	0.115	0.135		.133	.132	.132	.132		
T	0.178	0.198		.188	.188	.188	.188		
U	2.940	2.980		2.960	2.960	2.960	2.960		
V	0.230	0.250		.240	.240	.242	.242		
W	0.115	0.135		.124	.124	.124	.124		
X	0.307	0.312		.310	.311	.311	.311		
Y	0.760	0.765		.760	.760	.760	.760		
Z	0.352	0.372		.367	.366	.366	.366		
AA	0.470	0.530		.500	.500	.500	.500		
AB	0.615	0.635		.626	.626	.626	.626		
AC	0.053	0.073		.063	.063	.063	.063		
AD	0.240	0.260		.256	.250	.250	.250		
AE	1.375	1.395		1.384	1.387	1.387	1.387		
AF	0.115	0.135		.135	.135	.135	.135		
AG	0.240	0.280		.260	.260	.260	.260		
AH	0.240	0.260		.250	.250	.250	.250		
AI	2.000	2.020		2.001	2.001	2.001	2.001		
AJ	0.023	0.043		.033	.033	.033	.033		
Accept/Reject									

Measured by:	[illegible]	Audited by	B.A
Date:	11.7.19	Date:	11/07/19

Rev	Date	Change	Revised by	Approved
A		New Issue	RF	
B	02.09.24	Re-format; Added Rev. D	KJ	
C	02.10.11	Re-format; Added DT8682, DT8683, DT8684	KJ	
D	05.05.05	Added dimension AI	KJ/RF	
E	05.12.05	Added dimension AJ	KJ/JLM	

Dart Aerospace Ltd

W/O:		WORK ORDER CHANGES					
DATE	STEP	PROCEDURE CHANGE	By	Date	Qty	Approval Chief Eng / Prod Mgr	Approval QC Inspector

Part No: _____ **PAR #:** _____ **Fault Category:** _____ **NCR:** Yes No **DQA:** _____ **Date:** _____

Resolution: _____ **Disposition:** _____ **QA: N/C Closed:** _____ **Date:** _____

NCR:		WORK ORDER NON-CONFORMANCE (NCR)						
DATE	STEP	Description of NC Section A	Corrective Action Section B			Verification Section C	Approval Chief Eng	Approval QC Inspector
			Initial Chief Eng	Action Description Chief Eng	Sign & Date			

NOTE: Date & initial all entries

DART AEROSPACE LTD	Work Order:	71107
Description: Saddle, Fwd Inboard	Part Number:	D2572
Inspection Dwg: D2572 Rev. E		Page 1 of 1

Inspect dimensions highlighted on inspection sheet drawing D2572 Rev. E and record below:

				Recorded Actual Dimensions					
Dim	Min	Max	Go/No Go Gauge	1	2	3	4	By	Date
A	0.438	0.443		.440	.440				
B	1.745	1.755		1.750	1.750				
C	3.495	3.505		3.500	3.500				
D	1.745	1.755		1.750	1.750				
E	7.990	8.010		8.004	8.004				
F	0.490	0.510		.495	.495				
G	0.257	0.262		.257	.257				
H	0.375	0.380		.377	.377				
I	0.490	0.510		.500	.500				
J	1.174	1.184		1.178	1.178				
K	0.558	0.578		.565	.565				
L	1.174	1.184		1.178	1.178				
M	1.490	1.500		1.495	1.495				
N	2.495	2.505		2.500	2.500				
O	3.869	3.879		3.874	3.874				
P	0.115	0.135		.125	.125				
Q	0.115	0.135		.135	.135				
R	0.240	0.260		.252	.252				
S	0.115	0.135		.132	.132				
T	0.178	0.198		.188	.188				
U	2.940	2.980		2.960	2.960				
V	0.230	0.250		.242	.242				
W	0.115	0.135		.124	.124				
X	0.307	0.312		.311	.311				
Y	0.760	0.765		.760	.760				
Z	0.352	0.372		.366	.366				
AA	0.470	0.530		.500	.500				
AB	0.615	0.635		.626	.626				
AC	0.053	0.073		.063	.063				
AD	0.240	0.260		.250	.250				
AE	1.375	1.395		1.387	1.387				
AF	0.115	0.135		.135	.135				
AG	0.240	0.280		.260	.260				
AH	0.240	0.260		.250	.250				
AI	2.000	2.020		2.001	2.001				
AJ	0.023	0.043		.033	.033				
Accept/Reject									

Measured by:	RQ
Date:	11. 7. 19

Audited by	B.A
Date:	11/07/20

Rev	Date	Change	Revised by	Approved
A		New Issue	RF	
B	02.09.24	Re-format; Added Rev. D	KJ	
C	02.10.11	Re-format; Added DT8682, DT8683, DT8684	KJ	
D	05.05.05	Added dimension AI	KJ/RF	
E	05.12.05	Added dimension AJ	KJ/JLM	

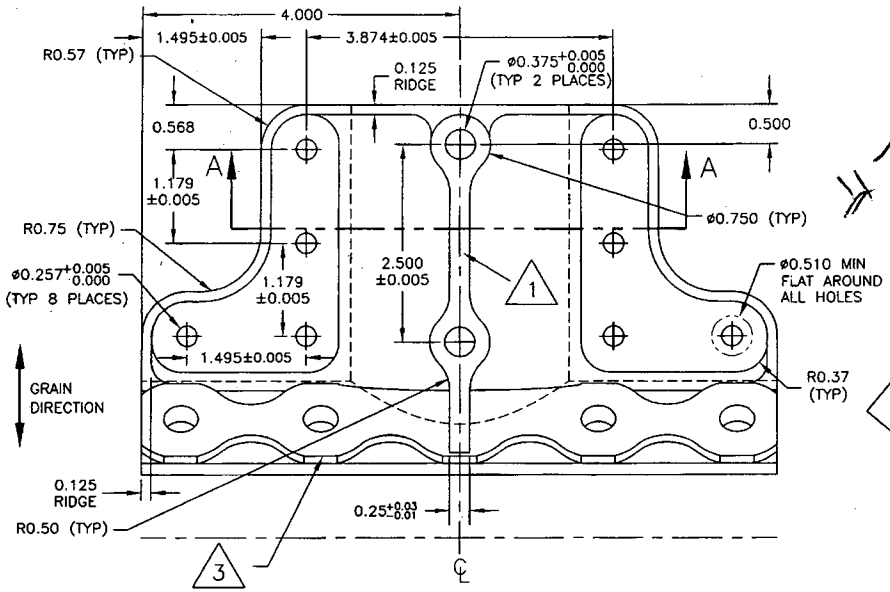

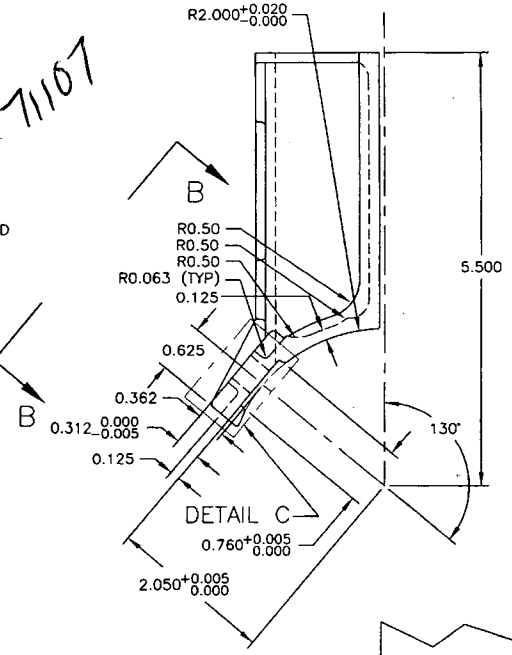

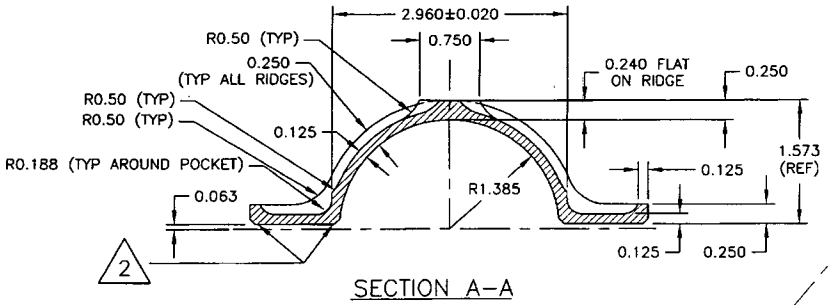

SECTION A–A

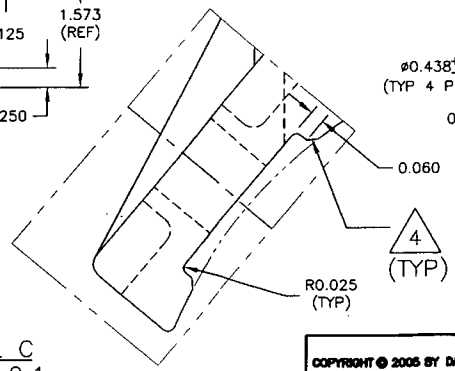

DETAIL C
SCALE 2:1

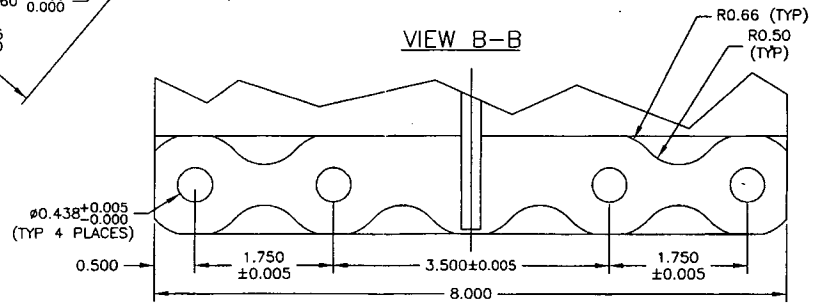

RELEASED
05.12.06

NOTES

MATERIAL: 7075–T7351 (QQ–A–250/12)
(REF DART SPEC. D6102–003)
FINISH: ACID ETCH, ALODINE PER DART QSI 005 4.1
POWDER COAT GLOSS WHITE (REF 4.3.5.1) PER DART QSI 005 4.3
BREAK ALL SHARP EDGES 0.010 TO 0.020
TOLERANCES ARE PER DART QSI 018 UNLESS OTHERWISE NOTED

1. ENGRAVE PART AND BATCH NUMBER IN THIS AREA TO MAX DEPTH OF 0.010
2. CHAMFER 0.063" x 45° AROUND THIS SURFACE (TYPICAL 2 PLACES)
3. CHAMFER 0.063 x 45° ALL AROUND
4. CHAMFER 0.033 x 45° (SEE DETAIL C) E

E	05.07.13	ADD CHAMFER ON RIDGE NOTE 4
D	02.09.06	ADD RIDGES; TIGHTEN TOLERANCES
C	99.10.22	INCORP. DEO 9123/9079/9102 ADD DIMENSIONS PER TSR A1177
B	96.12.02	ADD GRAIN DIR., 0.438 WAS 0.425
A	96.09.16	NEW ISSUE

COPYRIGHT © 2005 BY DART AEROSPACE LTD.

THIS DOCUMENT IS PRIVATE AND CONFIDENTIAL AND IS SUPPLIED ON THE EXPRESS CONDITION THAT IT IS NOT TO BE USED FOR ANY PURPOSE OR COPIED OR COMMUNICATED TO ANY OTHER PERSON WITHOUT WRITTEN PERMISSION FROM DART AEROSPACE LTD.

DESIGN: DS	DRAWN BY: PH	DART AEROSPACE LTD. HAWKESBURY, ONTARIO, CANADA	
CHECKED	APPROVED	DRAWING NO. D2572	REV. E SHEET 1 OF 1
DATE: 05.07.13		TITLE: INNER FWD SADDLE	SCALE: 2:3

Dart Aerospace Ltd

W/O:		WORK ORDER CHANGES					
DATE	STEP	PROCEDURE CHANGE	By	Date	Qty	Approval Chief Eng / Prod Mgr	Approval QC Inspector

Part No: _____ **PAR #:** _____ **Fault Category:** _____ **NCR:** Yes No **DQA:** _____ **Date:** _____

Resolution: _____ **Disposition:** _____ **QA: N/C Closed:** _____ **Date:** _____

NCR:		WORK ORDER NON-CONFORMANCE (NCR)						
DATE	STEP	Description of NC Section A	Corrective Action Section B			Verification Section C	Approval Chief Eng	Approval QC Inspector
			Initial Chief Eng	Action Description Chief Eng	Sign & Date			

NOTE: Date & initial all entries

H:\fFORMS\Quality Assurance\approved QA\NCRWO RevE